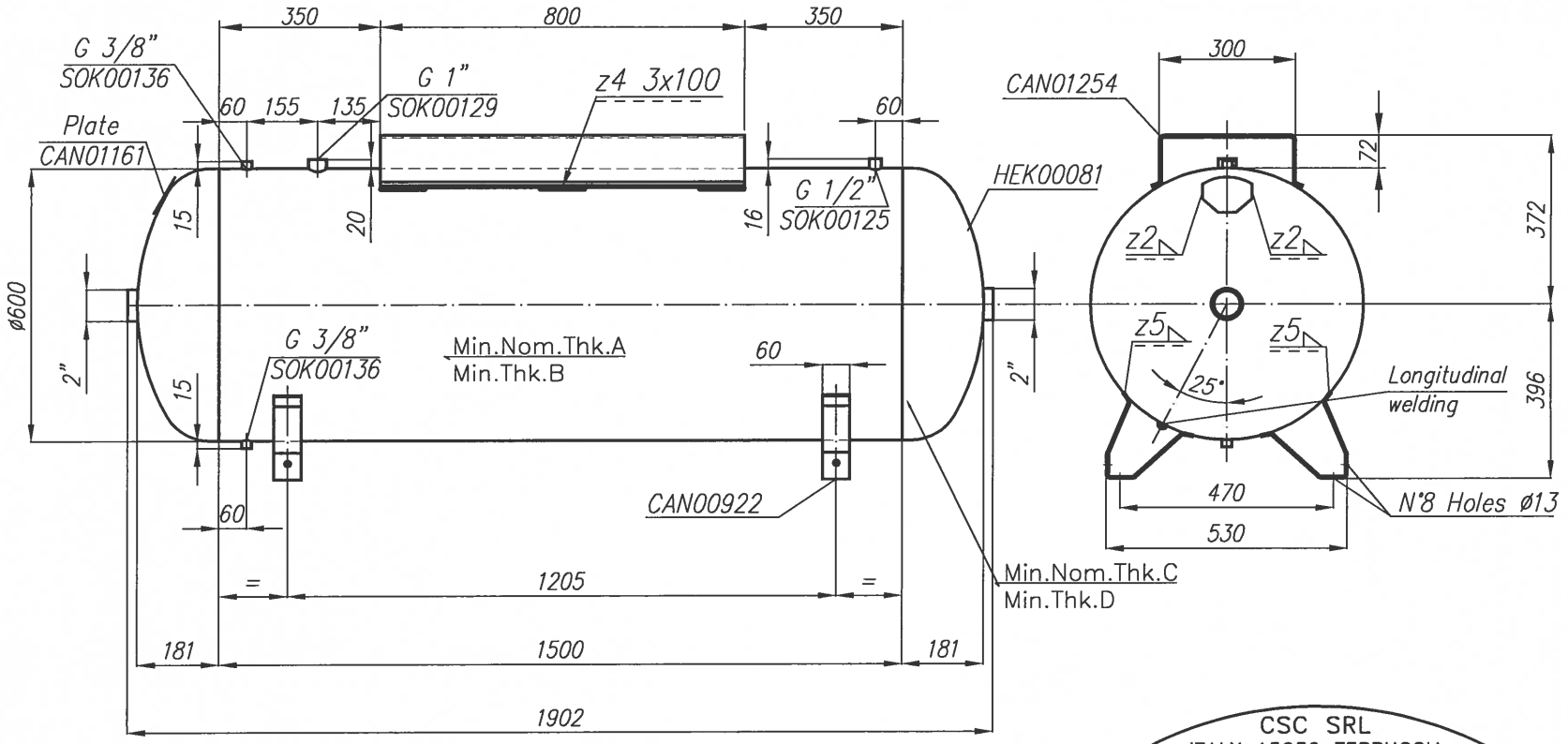

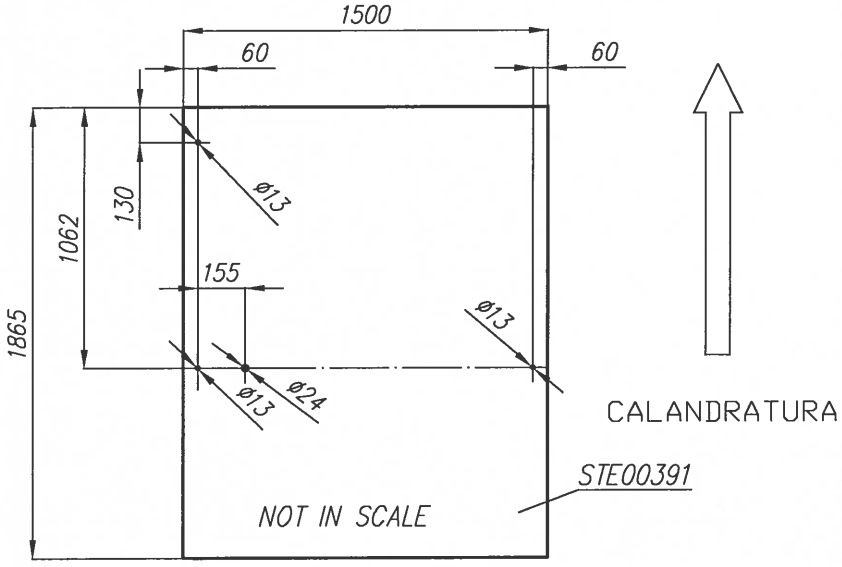

CALANDRATURA

CSC SRL
ITALY 15030 TERRUGGIA
STR. CACCIOLO 34
CE 0060 TIPO 5H500
V 500 L AIR PS 11 BAR
T MIN -10° C T MAX +120° C
N. ANNO

REV.	REASON OF REVISION	DATE	SIGN.

	PREPARED	APPROVED	REVIEWED
DATE	08/01/18		
SIGNATURE	M. ROSSI		

CSC TERRUGGIA (AL) - ITALY

LT 500 CD 11 BAR
– STANDARD –

REPLACE DRAWING
– –

TOLERANCES, IF NOT INDICATED, ACCORDING TO:
C–G SE 03.03/3

SHEET A4
SCALE 1:15

DRAWING No.
VES07122
REV. 00